B LADYBUG
RoRo

DOCKING PLAN

7,600 UNIT ROLL-ON ROLL-OFF CAR CARRIER

PLAN HISTORY

DATE	REV.NO.	DESCRIPTION	DRAWN	CHKD	APPRD.
2008.11.25	ORG	ORIGINALLY PREPARED FOR S398/399/400-S443	-	-	-
2011.03.10	4	ISSUED FOR FINISHED PLAN	S.K.LEE	-	J.S.KIM

BODY PLAN, SCALE 1:200

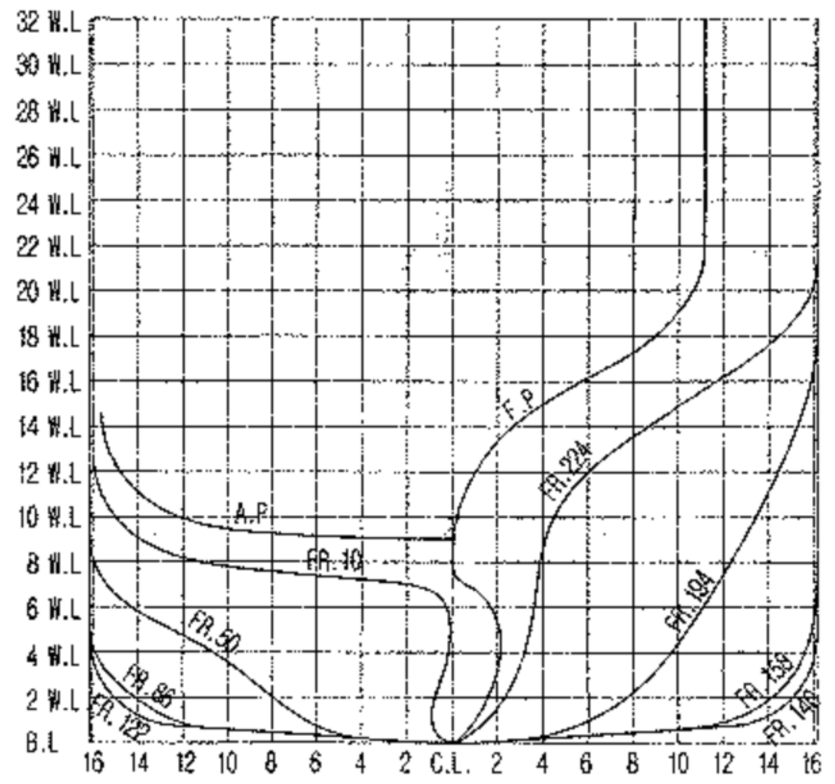
32 W.L
30 W.L
28 W.L
26 W.L
24 W.L
22 W.L
20 W.L
18 W.L
16 W.L
14 W.L
12 W.L
10 W.L
8 W.L
6 W.L
4 W.L
2 W.L
B.L
A.P.
F.P.
FR.10
FR.50
FR.86
FR.122
FR.224
FR.194
FR.158
FR.140
16 14 12 10 8 6 4 2 C.L. 2 4 6 8 10 12 14 16

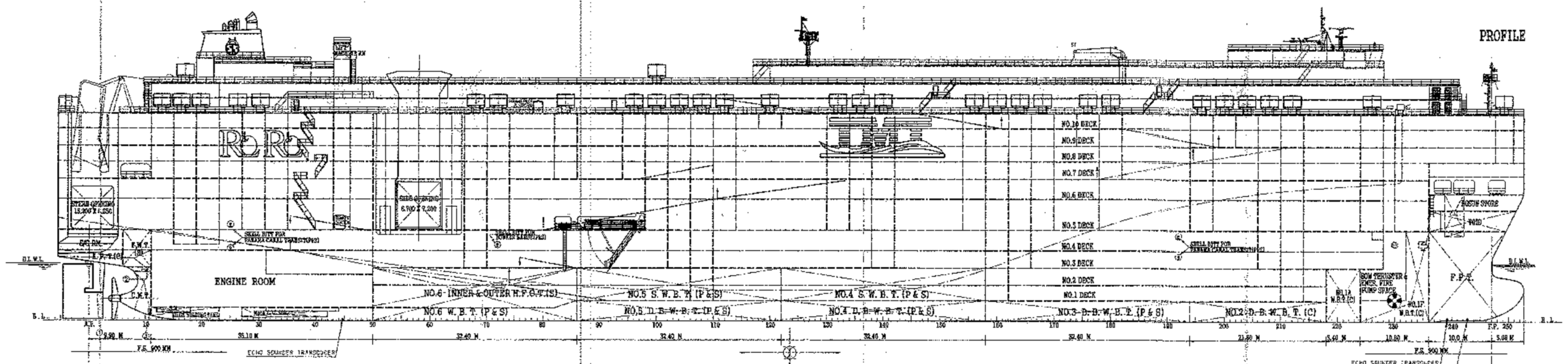
PROFILE
ENGINE ROOM
NO.10 DECK
NO.9 DECK
NO.8 DECK
NO.7 DECK
NO.6 DECK
NO.5 DECK
NO.4 DECK
NO.3 DECK
NO.2 DECK
NO.1 DECK
NO.6 INNER & OUTER H.F.O.T.(S)
NO.5 S.W.B.T.(P&S)
NO.4 S.W.B.T.(P&S)
NO.6 W.B.T.(P&S)
NO.5 D.B.W.B.T.(P&S)
NO.4 D.B.W.B.T.(P&S)
NO.3 D.B.W.B.T.(P&S)
NO.2 D.B.W.B.T.(C)
F.P.T.
D.L.W.L.
B.L.
A.P.
F.P.
ECHO SOUNDER TRANSDUCER
SPEED LOG TRANSDUCER
F.S. 900 MM
32.40 M

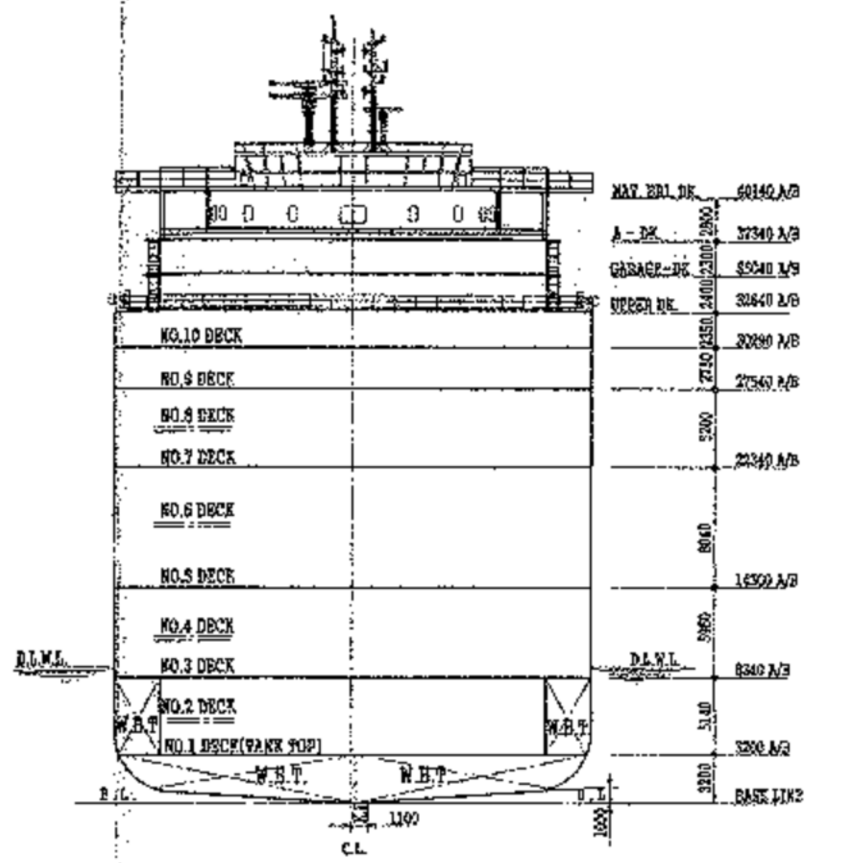
NO.10 DECK
NO.9 DECK
NO.8 DECK
NO.7 DECK
NO.6 DECK
NO.5 DECK
NO.4 DECK
NO.3 DECK
NO.2 DECK
NO.1 DECK(TANK TOP)
W.B.T.
D.L.W.L.
B.L.
C.L.
BASE LINE

MIDSHIP SECTION

DETAIL 2, 3, SCALE 1: 100

FR.11 -300 SEC.

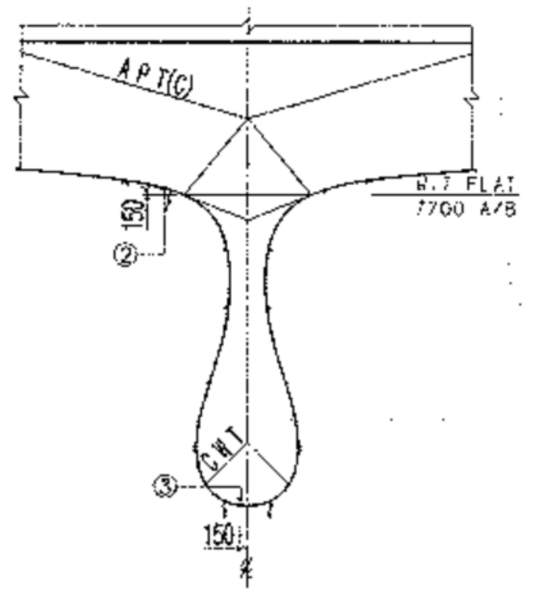
A P T(C)
N.T FLAT
7700 A/B
150
②
C W T
③
150

DETAIL 4, SCALE 1: 100

FR.27 SEC.

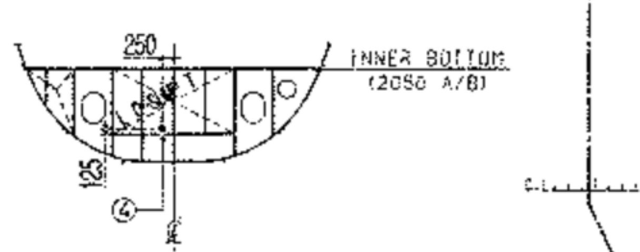
250
INNER BOTTOM
(2050 A/B)
125
④

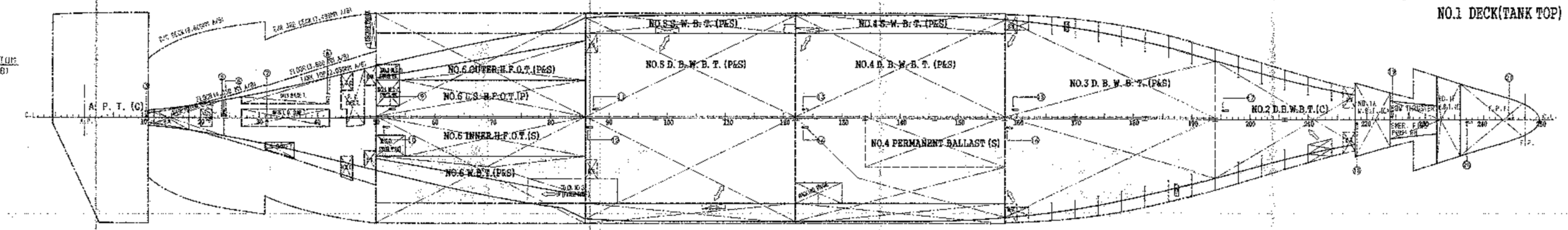
NO.1 DECK(TANK TOP)
A. P. T. (C)
NO.6 OUTER H.F.O.T.(P&S)
NO.6 L.S.H.F.O.T.(P)
NO.6 INNER H.F.O.T.(S)
NO.6 W.B.T.(P&S)
NO.5 S.W.B.T.(P&S)
NO.5 D.B.W.B.T.(P&S)
NO.4 S.W.B.T.(P&S)
NO.4 D.B.W.B.T.(P&S)
NO.4 PERMANENT BALLAST (S)
NO.3 D.B.W.B.T.(P&S)
NO.2 D.B.W.B.T.(C)
F.P.T.
EMER. F.F. PUMP RM
BOW THRUSTER
C.L.

ARRG'T OF ECHO SOUNDER TRANSDUCER (E/R AREA) (NON SCALE)

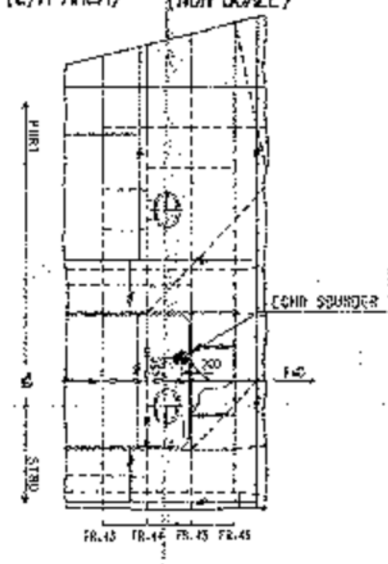
PORT
STBD
FWD
ECHO SOUNDER TRANSDUCER
FR.43
FR.44
FR.45

ARRG'T OF ECHO SOUNDER & SPEED LOG TRANSDUCER (FORE SHIP) (NON SCALE)

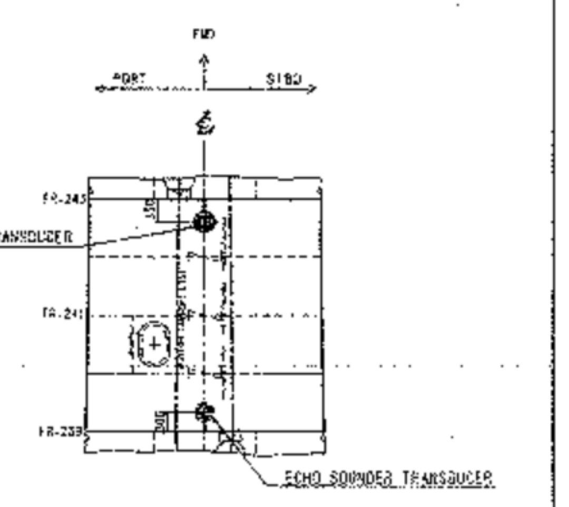
FWD
PORT
STBD
SPEED LOG TRANSDUCER
ECHO SOUNDER TRANSDUCER
FR.243
FR.241
FR.239

MIDSHIP SECTION, SCALE 1: 100

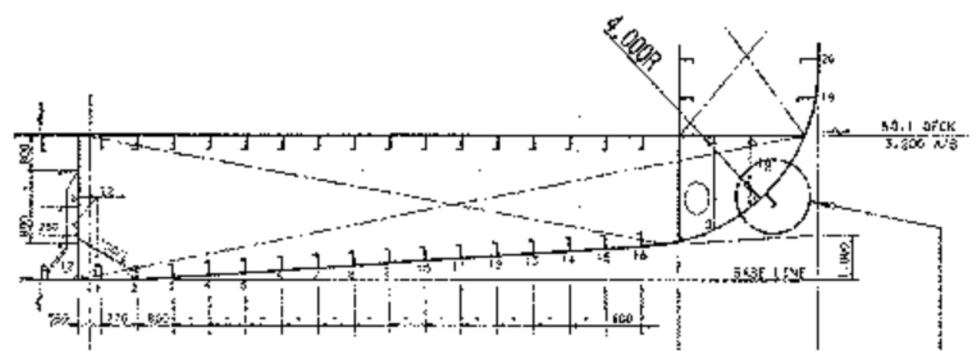
4,000R
NO.1 DECK
3,200 A/B
BASE LINE

DETAIL OF BILGE KEEL, SCALE 1: 40

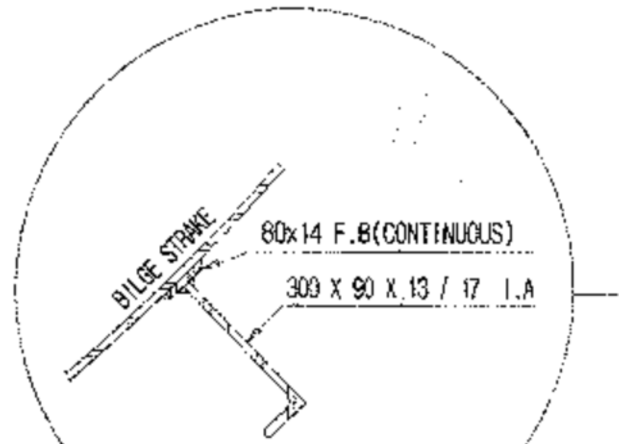
BILGE STRAKE
80x14 F.B(CONTINUOUS)
300 X 90 X 13 / 17 I.A

LINES OF BILGE KEEL, NON-SCALE

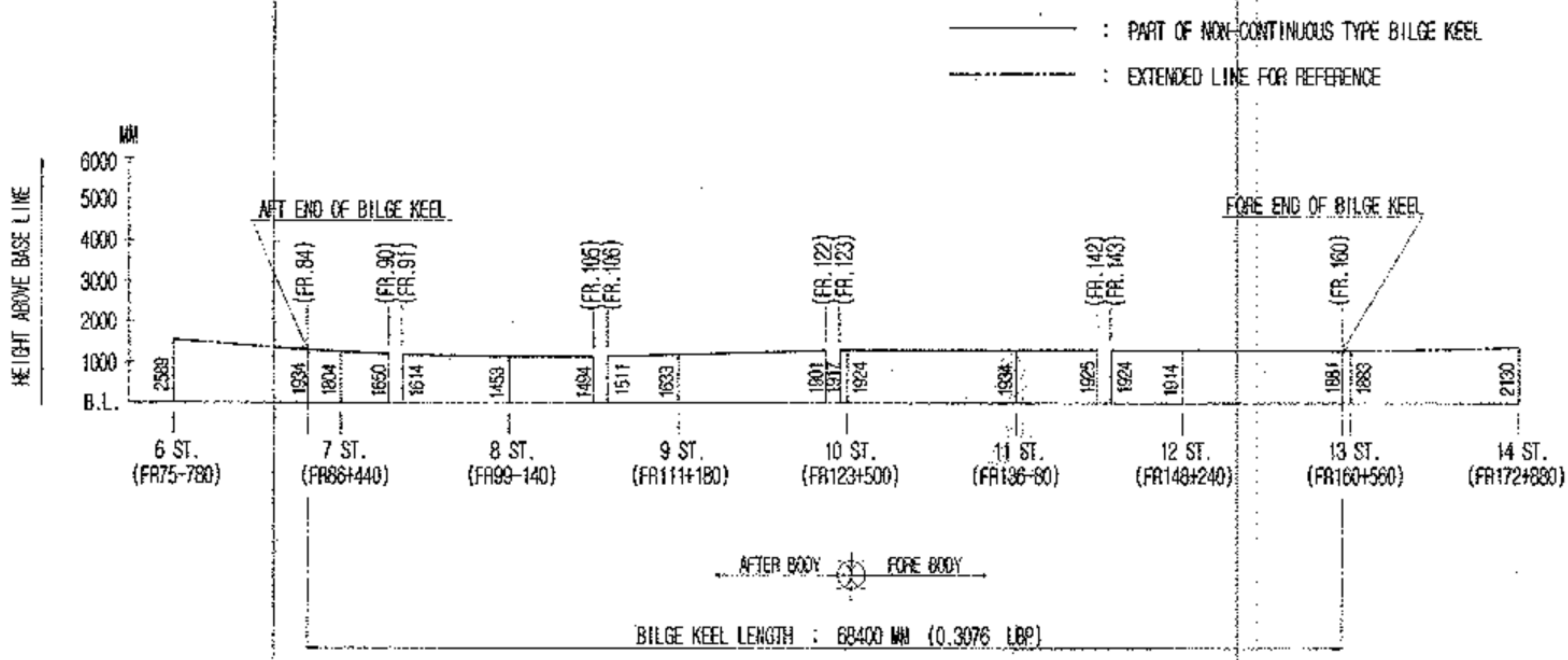
: PART OF NON-CONTINUOUS TYPE BILGE KEEL
: EXTENDED LINE FOR REFERENCE
MM
HEIGHT ABOVE BASE LINE
6000
5000
4000
3000
2000
1000
B.L.
AFT END OF BILGE KEEL
FORE END OF BILGE KEEL
(FR.84)
(FR.90)
(FR.91)
(FR.105)
(FR.106)
(FR.122)
(FR.123)
(FR.142)
(FR.143)
(FR.160)
2589
1934
1804
1650
1614
1453
1494
1511
1633
1901
1917
1924
1934
1925
1924
1914
1881
1883
2130
6 ST. (FR75-780)
7 ST. (FR86+440)
8 ST. (FR99-140)
9 ST. (FR111+180)
10 ST. (FR123+500)
11 ST. (FR136-80)
12 ST. (FR148+240)
13 ST. (FR160+560)
14 ST. (FR172+880)
AFTER BODY
FORE BODY
BILGE KEEL LENGTH : 68400 MM (0.3076 LBP)

LIST OF BOTTOM PLUG

PLUG NO.	POSITION			COMPARTMENT	ABBREVIATION	PLUG TYPE
	FR. NO.	OFF C.L	P&S			
①	1	0	C	RUDDER HORN	'NO MARK'	A
②	10+250	SEE DET.	P	AFTER PEAK TANK	A P T	A
③	11-300	SEE DET.	P	COOLING WATER TANK	C W T	A
④	27	SEE DET.	P	MAIN LUBRICATING OIL SUMP TANK	'NO MARK'	B
⑤	24-300	250	P	BILGE HOLDING TANK	BLG HOLD T	B
⑥	24+300	250	P	COFFERDAM	C D	A
⑦	31+300	300	S	COFFERDAM	C D	A
⑧	42-300	2405	P	OILY BILGE TANK	O BLG T	B
⑨	52+300	1300	P	NO.6 WATER BALLAST TANK	6 W B T	A
⑩	51+300	1300	S	NO.6 WATER BALLAST TANK	6 W B T	A
⑪	87+300	1300	P	NO.6 WATER BALLAST TANK	5 DB W B T	A
⑫	86+300	1300	S	NO.5 DOUBLE BOTTOM WATER BALLAST TANK	5 DB W B T	A
⑬	123+300	1300	P	NO.4 DOUBLE BOTTOM WATER BALLAST TANK	4 DB W B T	A
⑭	123+300	1300	S	NO.4 DOUBLE BOTTOM WATER BALLAST TANK	4 DB W B T	A
⑮	159+300	1300	P	NO.3 DOUBLE BOTTOM WATER BALLAST TANK	3 DB W B T	A
⑯	158+300	1300	S	NO.3 DOUBLE BOTTOM WATER BALLAST TANK	3 DB W B T	A
⑰	195+300	1300	P	NO.2 DOUBLE BOTTOM WATER BALLAST TANK	2 DB W B T	A
⑱	218+300	500	S	NO.1 AFTER WATER BALLAST TANK	1 A W B T	A
⑲	224+300	400	P	NO.1 FORE WATER BALLAST TANK	1 F W B T	A
⑳	237+100	250	S	FORE PEAK TANK	F P T	A
㉑	244+300	100	P	FORE PEAK TANK	F P T	A

PAINTING AREAS

DESCRIPTION	LOCATION	AREA (M2)
FLAT BOTTOM	UP TO BILGE KEEL LEVEL	4,500
SIDE BOTTOM	UP TO DESIGN DRAFT, 9.0M	4,620
TOP SIDE	FROM DESIGN DRAFT TO NO.8 DECK	7,890
SUPER STRUCTURE	FROM NO.8 DECK TO UPPER DECK	5,850

TYPE OF PLUG

'A' TYPE ; WATER TANK PLUG	'B' TYPE ; OIL TANK PLUG
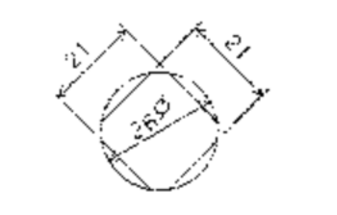	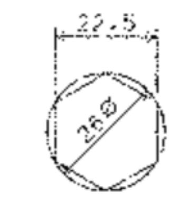

PRINCIPAL PARTICULARS

LENGTH O. A.	232.39	M
LENGTH B. P.	222.40	M
BREADTH MLD.	32.26	M
DEPTH MLD.	32.64	M
DRAUGHT (DESIGN) MLD.	9.00	M
DRAUGHT (SCANTLING) MLD.	10.00	M

FREEBOARD : "B" TYPE

FLAG : PANAMA

CLASS : DET NORSKE VERITAS, +1A1, CAR CARRIER RO/RO
EO, MCDK, TMON

MAIN ENGINE : ONE(1), HYUNDAI B&W 8S60ME-C8

MCR : 19040 kW X 105.0 RPM

NCR : 17136 kW X 101.4 RPM

SHIP NO.	IMO SHIP IDENTIFICATION NO
S398	IMO 9441867
S399	IMO 9448394
S400	IMO 9448409
S443	IMO 9472206

C A U T I O N
THIS DRAWING CONTAINS CONFIDENTIAL PROPRIETARY INFORMATION. HENCE, THE REPRODUCTION, TRANSFER AND/OR UTILIZATION IN WHOLE OR IN PART ARE PROHIBITED WITHOUT THE WRITTEN PERMISSION OF HYUNDAI SAMHO HEAVY INDUSTRIES CO., LTD.

☐FOR APPROVAL
☐FOR WORKING
☐FOR [illegible]

DEP'T NO. D0210	SHIP NO. S398/399/400 S443	SHIP TYPE 7,600 UNIT ROLL-ON ROLL-OFF CAR CARRIER
TEL. NO. 2653	SHIP DESIGN OFFICE DESIGN COORDINATION DEP'T	SHIP NAME

APPROVED BY S. K. GYEA

CHECKED BY

DRAWN BY S. K. LEE

TITLE

DOCKING PLAN

HYUNDAI SAMHO HEAVY INDUSTRIES CO., LTD.
SAMHO SHIPYARD, KOREA

SCALE	DWG NO.	REV.
1/300	2G-7000-002	
DATE 2008.11.25	CONSOLIDATED NO. B-04	

BODY PLAN, SCALE 1:200

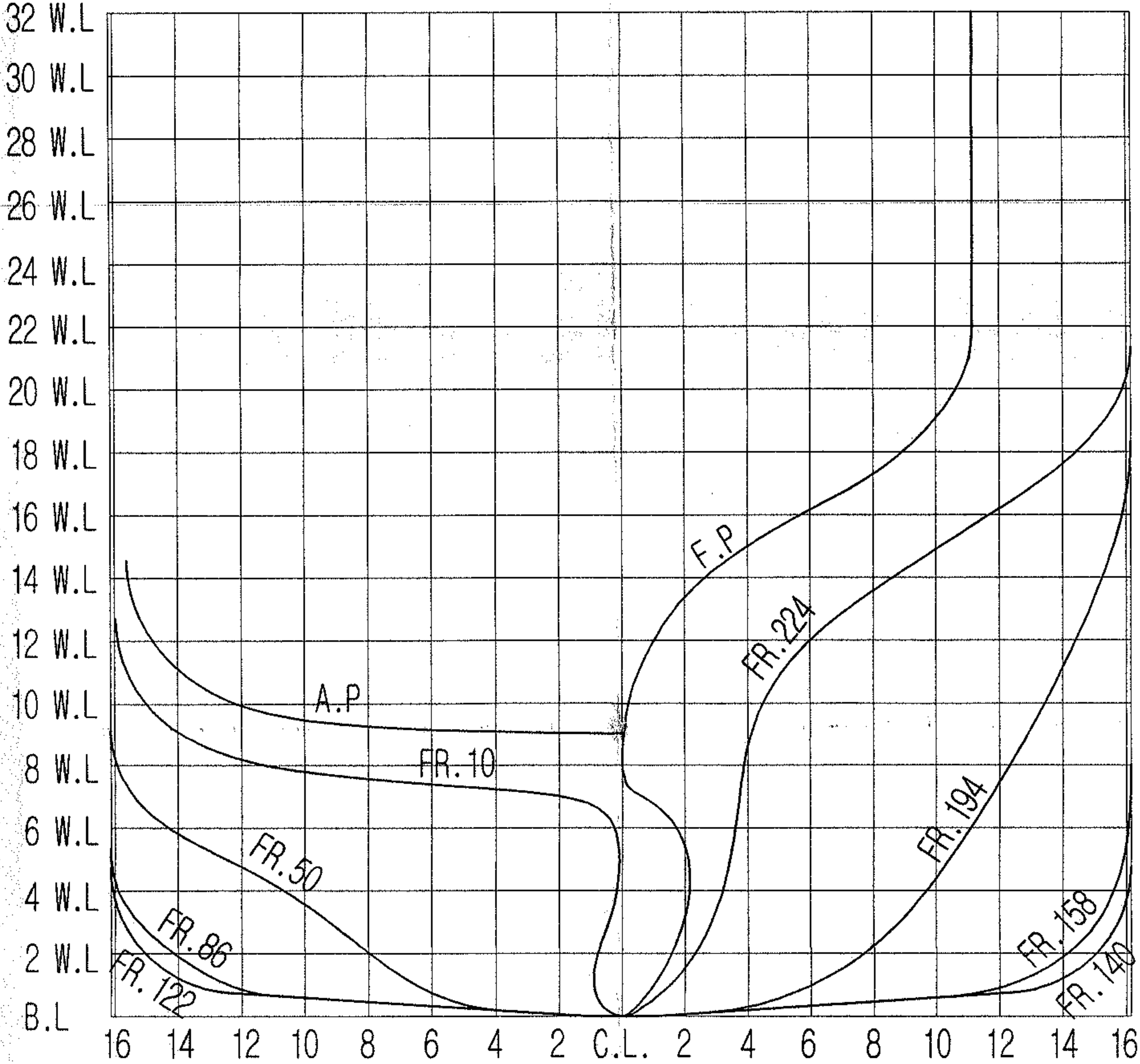
32 W.L
30 W.L
28 W.L
26 W.L
24 W.L
22 W.L
20 W.L
18 W.L
16 W.L
14 W.L
12 W.L
10 W.L
8 W.L
6 W.L
4 W.L
2 W.L
B.L
A.P
FR.10
FR.50
FR.86
FR.122
F.P
FR.224
FR.194
FR.158
FR.140
16
14
12
10
8
6
4
2
C.L.
2
4
6
8
10
12
14
16

DETAIL 2, 3, SCALE 1: 100

FR.11 $^{-300}$ SEC.

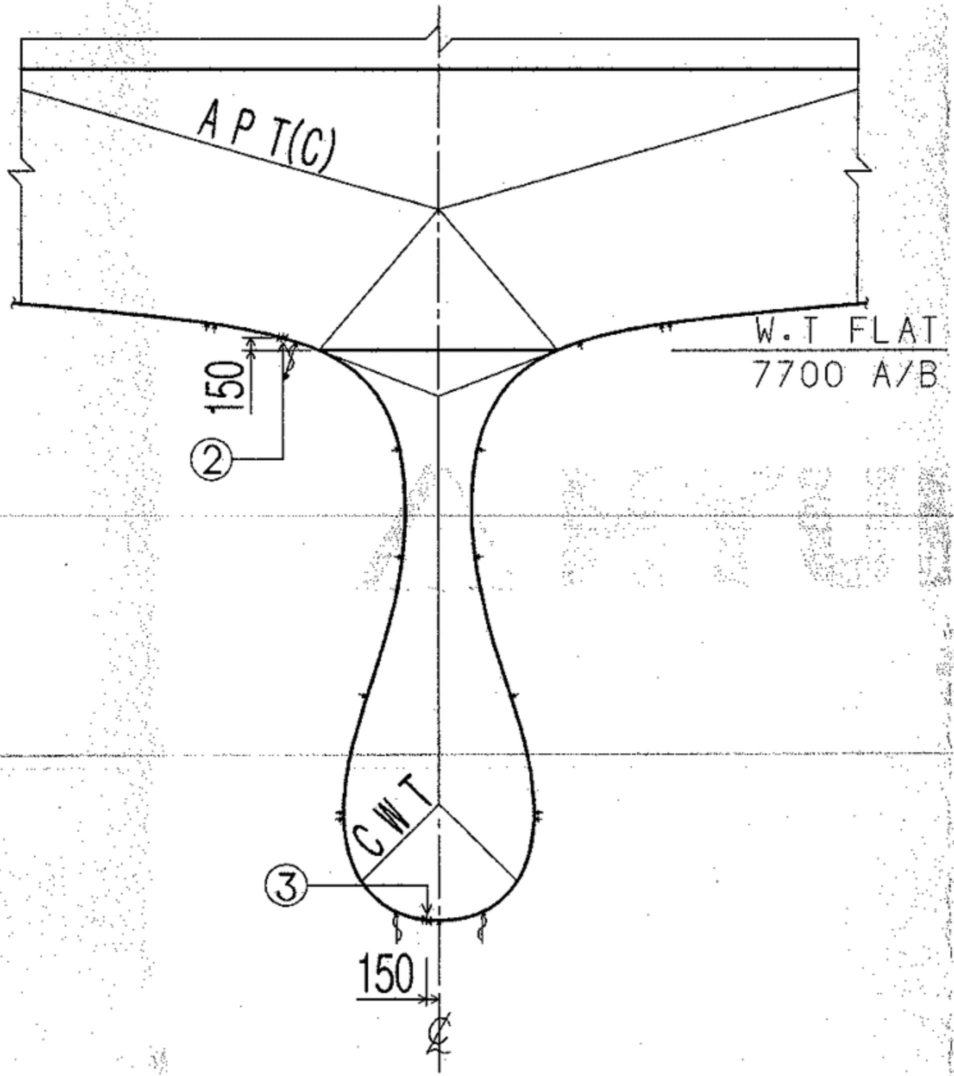

A P T(C)
W.T FLAT
7700 A/B
150
②
C W T
③
150
℄

DETAIL 4, SCALE 1: 100

FR.27 SEC.

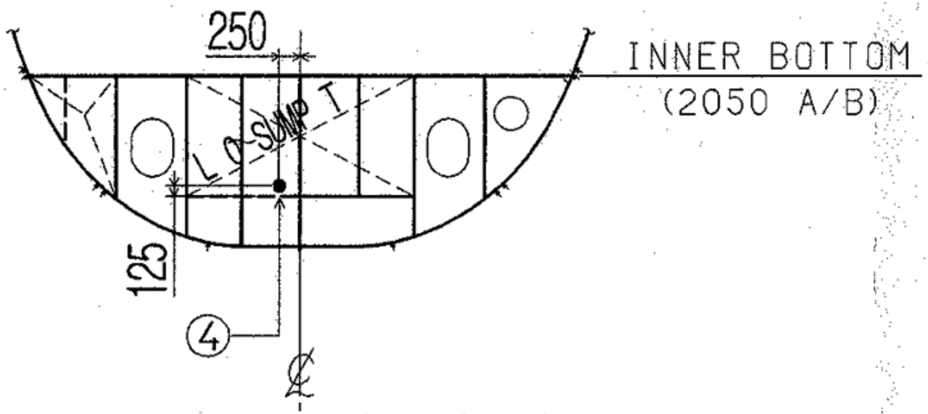

250
INNER BOTTOM
(2050 A/B)
L.O SUMP T
125
④
℄

HYUNDAI SAMHO
종합설계부

MIDSHIP SECTION, SCALE 1: 100

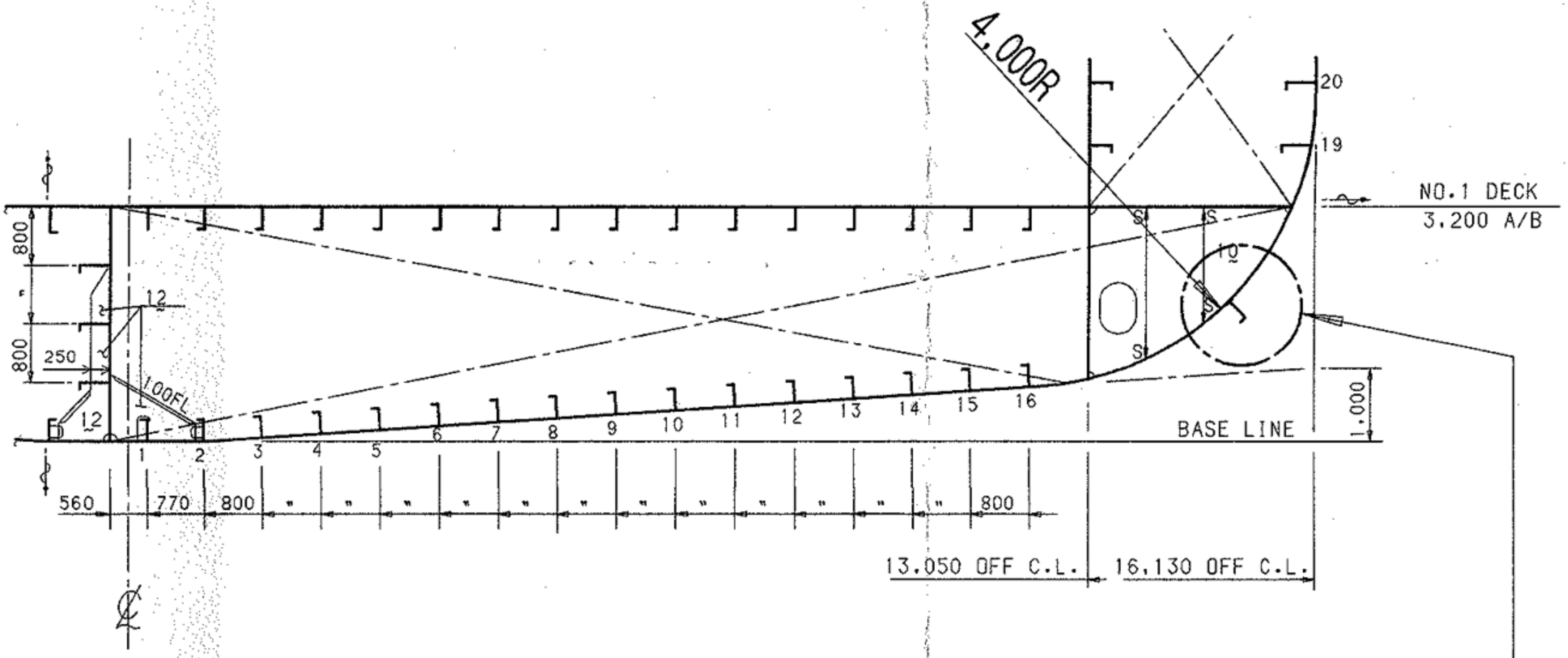
4,000R
20
19
NO.1 DECK
3,200 A/B
800
800
250
12
12
100FL
10
S
S
S
S
1.000
BASE LINE
1
2
3
4
5
6
7
8
9
10
11
12
13
14
15
16
560
770
800
800
13,050 OFF C.L.
16,130 OFF C.L.
℄

DETAIL OF BILGE KEEL, SCALE 1: 40

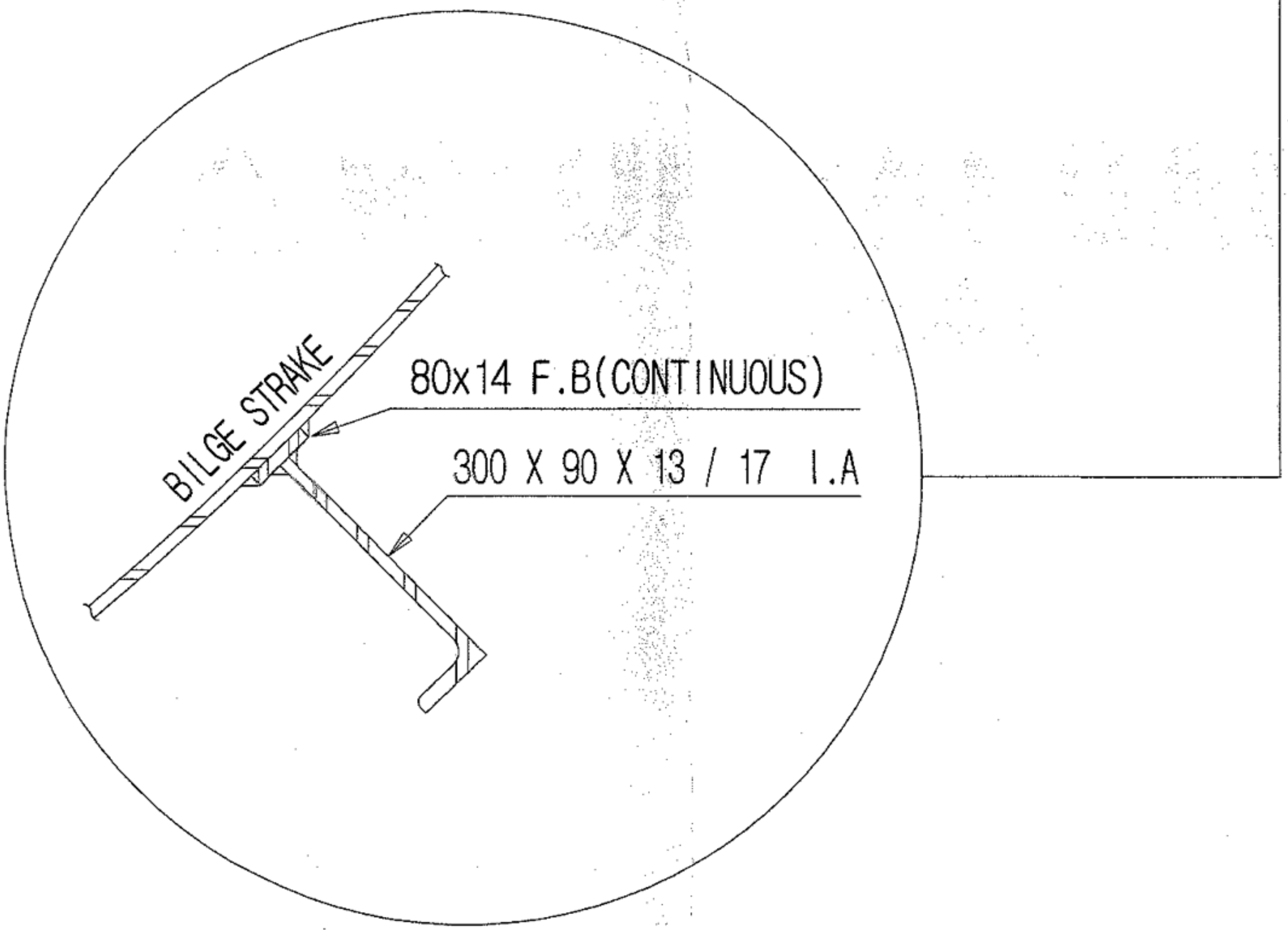
BILGE STRAKE
80x14 F.B(CONTINUOUS)
300 X 90 X 13 / 17 I.A

LINES OF BILGE KEEL, NON-SCALE

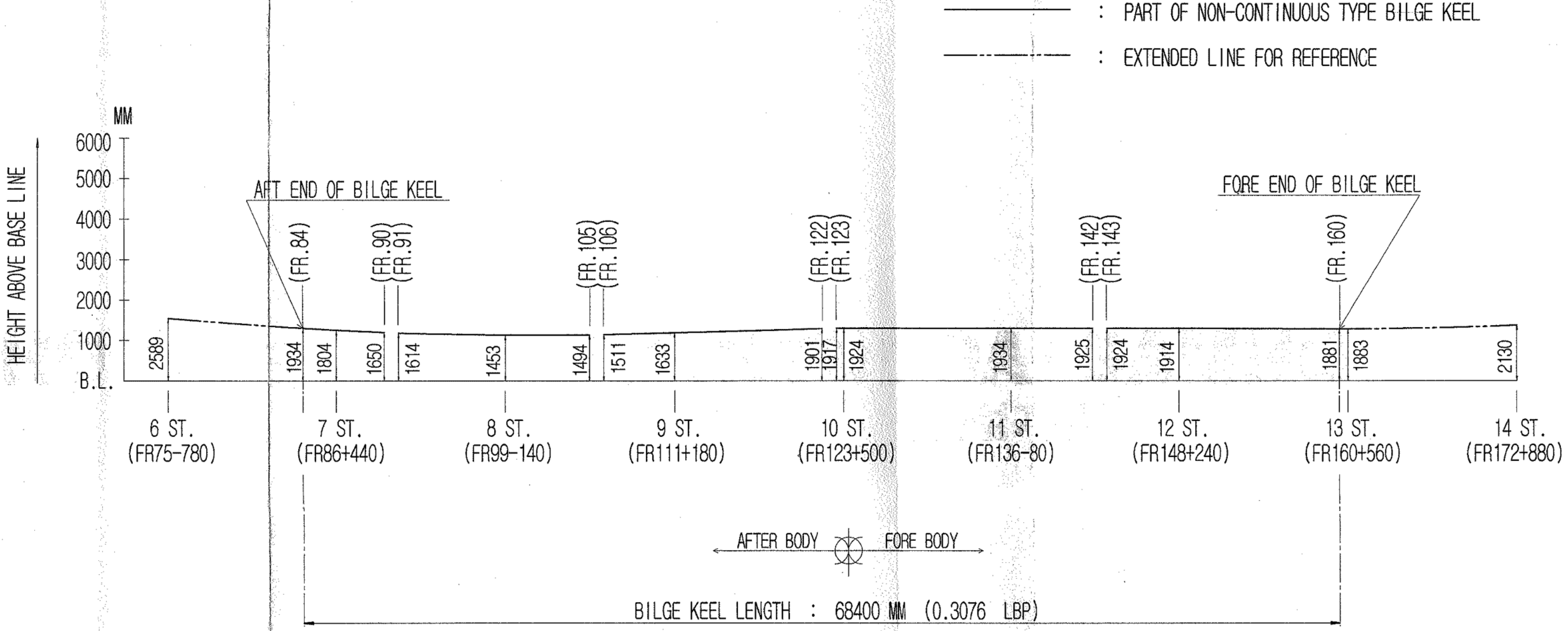
: PART OF NON-CONTINUOUS TYPE BILGE KEEL
: EXTENDED LINE FOR REFERENCE
HEIGHT ABOVE BASE LINE
MM
6000
5000
4000
3000
2000
1000
B.L.
AFT END OF BILGE KEEL
FORE END OF BILGE KEEL
(FR.84)
(FR.90)
(FR.91)
(FR.105)
(FR.106)
(FR.122)
(FR.123)
(FR.142)
(FR.143)
(FR.160)
2589
1934
1804
1650
1614
1453
1494
1511
1633
1901
1917
1924
1934
1925
1924
1914
1881
1883
2130
6 ST.
(FR75-780)
7 ST.
(FR86+440)
8 ST.
(FR99-140)
9 ST.
(FR111+180)
10 ST.
(FR123+500)
11 ST.
(FR136-80)
12 ST.
(FR148+240)
13 ST.
(FR160+560)
14 ST.
(FR172+880)
AFTER BODY
FORE BODY
BILGE KEEL LENGTH : 68400 MM (0.3076 LBP)

PROFILE

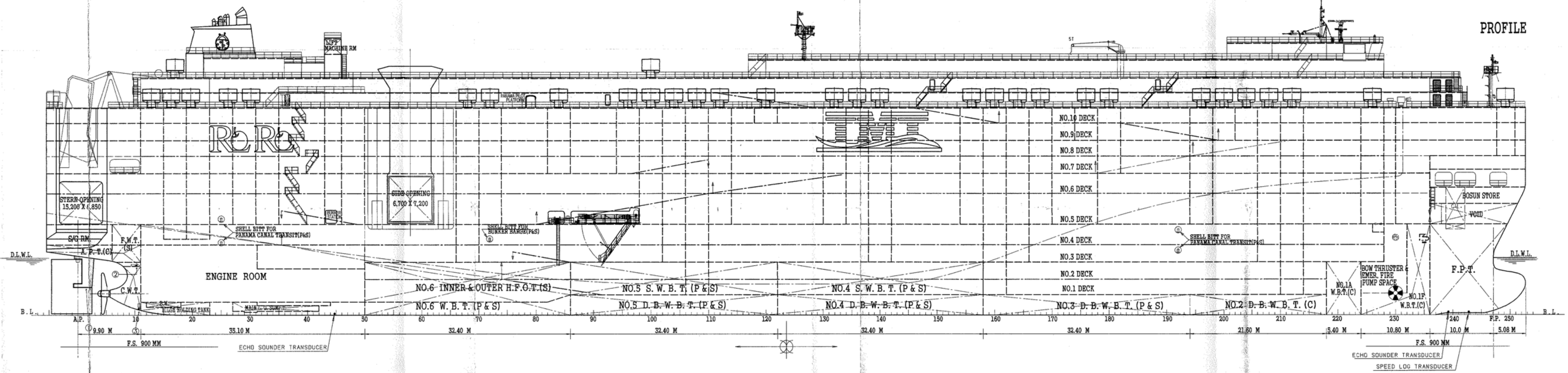
LIFT MACHINE RM
ST
PANAMA PILOT PLATFORM
RoRo
NO.10 DECK
NO.9 DECK
NO.8 DECK
NO.7 DECK
NO.6 DECK
NO.5 DECK
NO.4 DECK
NO.3 DECK
NO.2 DECK
NO.1 DECK
STERN OPENING
15,200 X 6,850
SIDE OPENING
6,700 X 7,200
BUNKER STATION
SHELL BITT FOR
PANAMA CANAL TRANSIT(P&S)
SHELL BITT FOR
BUNKER BARGE(P&S)
SHELL BITT FOR
PANAMA CANAL TRANSIT(P&S)
S/G RM.
F.W.T.
(S)
A. P. T.(C)
D.L.W.L.
②
C.W.T.
ENGINE ROOM
B.W.
BILGE HOLDING TANK
MAIN L.O. SUMP
NO.6 INNER & OUTER H.F.O.T.(S)
NO.6 W. B. T. (P & S)
NO.5 S. W. B. T. (P & S)
NO.5 D. B. W. B. T. (P & S)
NO.4 S. W. B. T. (P & S)
NO.4 D. B. W. B. T. (P & S)
NO.3 D. B. W. B. T. (P & S)
NO.2 D. B. W. B. T. (C)
NO.1A
W.B.T.(C)
BOW THRUSTER &
EMER. FIRE
PUMP SPACE
NO.1F
W.B.T.(C)
F.P.T.
BOSUN STORE
VOID
D.L.W.L.
B.L.
B.L.
A.P.
①
③
10
20
30
40
50
60
70
80
90
100
110
120
130
140
150
160
170
180
190
200
210
220
230
240
F.P. 250
9.90 M
35.10 M
32.40 M
32.40 M
32.40 M
32.40 M
21.60 M
5.40 M
10.80 M
10.0 M
5.08 M
F.S. 900 MM
F.S. 900 MM
ECHO SOUNDER TRANSDUCER
ECHO SOUNDER TRANSDUCER
SPEED LOG TRANSDUCER

NO.1 DECK(TANK TOP)

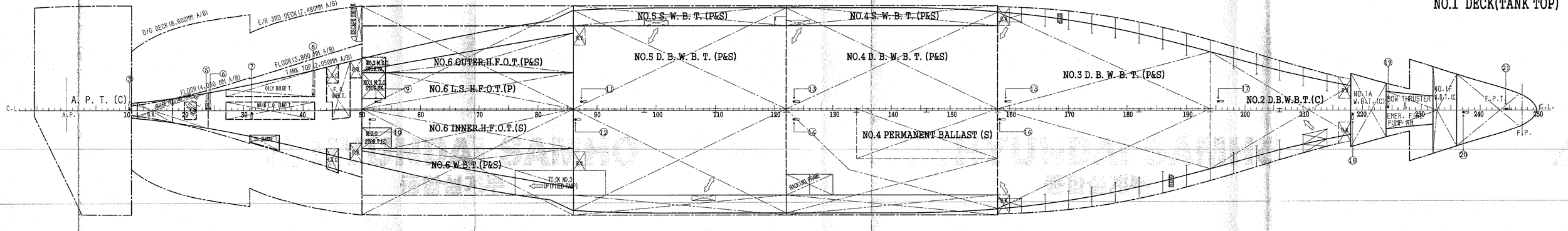
D/G DECK(8,600MM A/B)
E/R 3RD DECK(7,480MM A/B)
ESCAPE TRUNK
FLOOR(3,800 MM A/B)
TANK TOP(2,050MM A/B)
FLOOR(4,050 MM A/B)
BILGE HOLDING T.
OILY BILGE T.
MAIN L.O. SUMP T.
L.O. SLUDGE T.
F.O. OVF.T.
L.X.C
B.W.
NO.2 M.D.O. STOR.TK.
NO.3 M.D.O. STOR.TK.
M.G.O. STOR.T.(S)
A. P. T. (C)
A.P.
C.L.
NO.6 OUTER H.F.O.T.(P&S)
NO.6 L.S. H.F.O.T.(P)
NO.6 INNER H.F.O.T.(S)
NO.6 W.B.T.(P&S)
TO DK NO.3 UP(FIXED RAMP)
NO.5 S. W. B. T. (P&S)
NO.5 D. B. W. B. T. (P&S)
NO.4 S. W. B. T. (P&S)
NO.4 D. B. W. B. T. (P&S)
NO.4 PERMANENT BALLAST (S)
RACKING FRAME
NO.3 D. B. W. B. T. (P&S)
NO.2 D.B.W.B.T.(C)
NO.1A W.B.T.(C)
BOW THRUSTER & EMER. FIRE PUMP RM
NO.1F W.B.T.(C)
F.P.T.
F.P.
C.L.
10
20
30
40
50
60
70
80
90
100
110
120
130
140
150
160
170
180
190
200
210
220
230
240
250
③
⑤
⑥
⑦
⑧
⑨
⑩
⑪
⑫
⑬
⑭
⑮
⑯
⑰
⑱
⑲
⑳
㉑

LIST OF BOTTOM PLUG

PLUG NO.	POSITION			COMPARTMENT	ABBREVIA-TION	PLUG TYPE
	FR. NO.	OFF C.L	P&S			
①	1	0	C	RUDDER HORN	'NO MARK'	A
②	10+250	SEE DET.	P	AFTER PEAK TANK	A P T	A
③	11-300	SEE DET.	P	COOLING WATER TANK	C W T	A
④	27	SEE DET.	P	MAIN LUBRICATING OIL SUMP TANK	'NO MARK'	B
⑤	24-300	250	P	BILGE HOLDING TANK	BLG HOLD T	B
⑥	24+300	250	P	COFFERDAM	C D	A
⑦	31+300	300	S	COFFERDAM	C D	A
⑧	42-300	2405	P	OILY BILGE TANK	O BLG T	B
⑨	52+300	1300	P	NO.6 WATER BALLAST TANK	6 W B T	A
⑩	51+300	1300	S	NO.6 WATER BALLAST TANK	6 W B T	A
⑪	87+300	1300	P	NO.6 WATER BALLAST TANK	5 DB W B T	A
⑫	86+300	1300	S	NO.5 DOUBLE BOTTOM WATER BALLAST TANK	5 DB W B T	A
⑬	123+300	1300	P	NO.4 DOUBLE BOTTOM WATER BALLAST TANK	4 DB W B T	A
⑭	123+300	1300	S	NO.4 DOUBLE BOTTOM WATER BALLAST TANK	4 DB W B T	A
⑮	159+300	1300	P	NO.3 DOUBLE BOTTOM WATER BALLAST TANK	3 DB W B T	A
⑯	158+300	1300	S	NO.3 DOUBLE BOTTOM WATER BALLAST TANK	3 DB W B T	A
⑰	195+300	1300	P	NO.2 DOUBLE BOTTOM WATER BALLAST TANK	2 DB W B T	A
⑱	218+300	500	S	NO.1 AFTER WATER BALLAST TANK	1 A W B T	A
⑲	224+300	400	P	NO.1 FORE WATER BALLAST TANK	1 F W B T	A
⑳	237+100	250	S	FORE PEAK TANK	F P T	A
㉑	244+300	100	P	FORE PEAK TANK	F P T	A

PAINTING AREAS

DESCRIPTION	LOCATION	AREA (M2)
FLAT BOTTOM	UP TO BILGE KEEL LEVEL	4,500
SIDE BOTTOM	UP TO DESIGN DRAFT, 9.0M	4,620
TOP SIDE	FROM DESIGN DRAFT TO NO.8 DECK	7,890
SUPER STRUCTURE	FROM NO.8 DECK TO UPPER DECK	5,850

TYPE OF PLUG

'A' TYPE ; WATER TANK PLUG	'B' TYPE ; OIL TANK PLUG
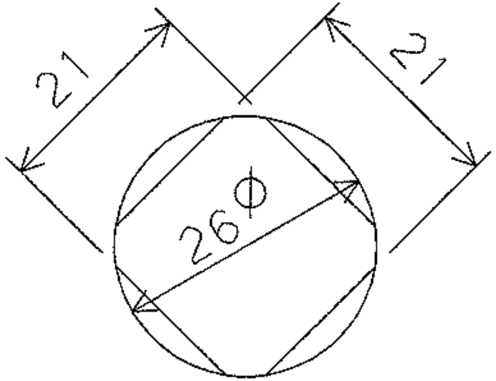	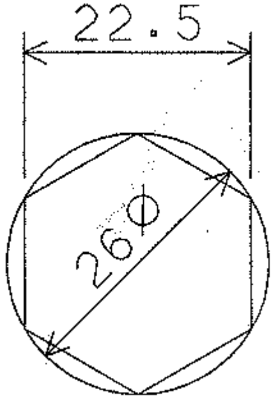

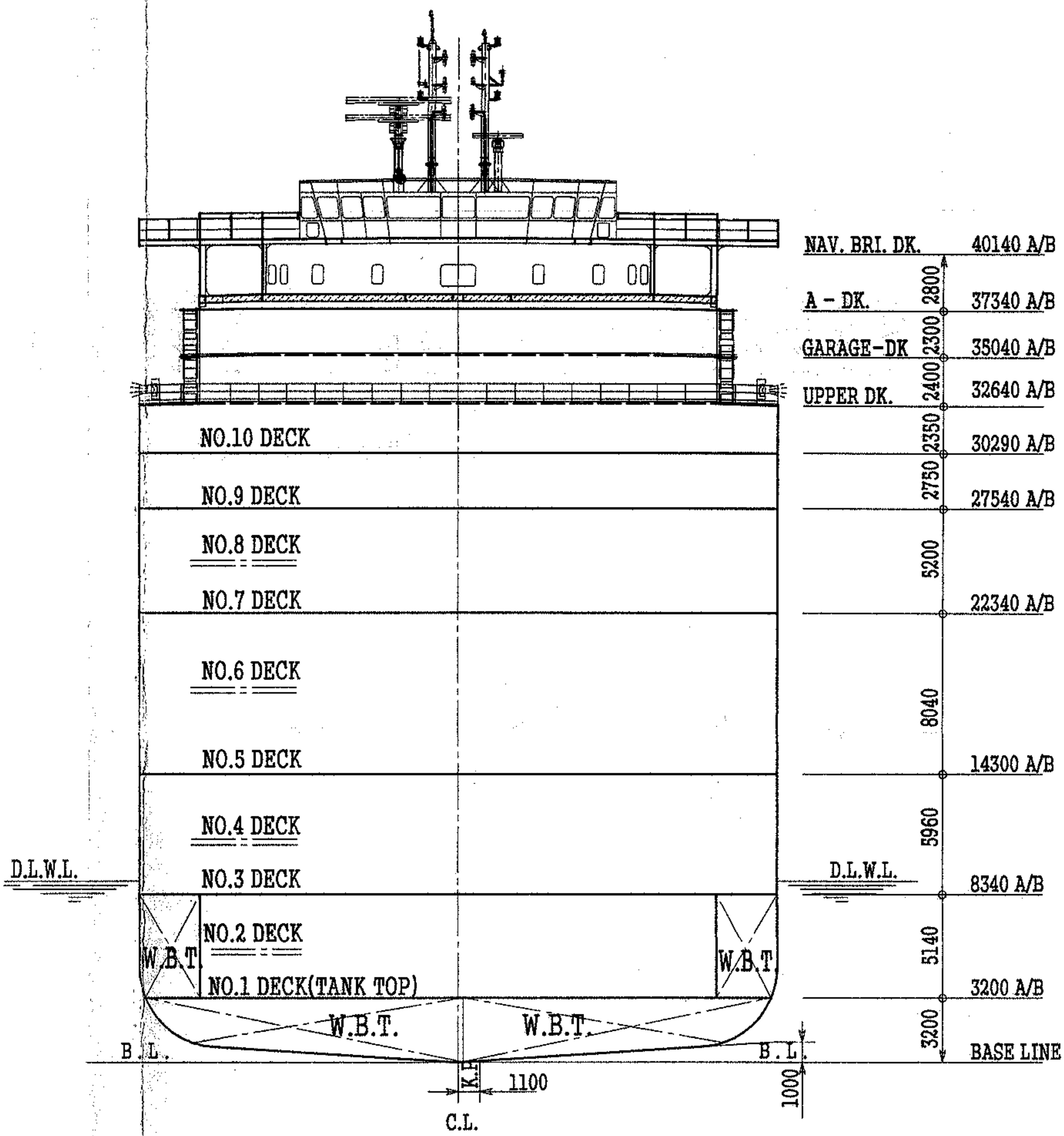
NAV. BRI. DK.
40140 A/B
A - DK.
37340 A/B
GARAGE-DK
35040 A/B
UPPER DK.
32640 A/B
NO.10 DECK
30290 A/B
NO.9 DECK
27540 A/B
NO.8 DECK
NO.7 DECK
22340 A/B
NO.6 DECK
NO.5 DECK
14300 A/B
NO.4 DECK
NO.3 DECK
8340 A/B
NO.2 DECK
NO.1 DECK(TANK TOP)
3200 A/B
BASE LINE
2800
2300
2400
2350
2750
5200
8040
5960
5140
3200
D.L.W.L.
D.L.W.L.
W.B.T.
W.B.T
W.B.T.
W.B.T.
B . L.
B . L.
K.P.
1100
1000
C.L.

MIDSHIP SECTION

ARRG'T OF ECHO SOUNDER TRANSDUCER (E/R AREA) (NON SCALE)

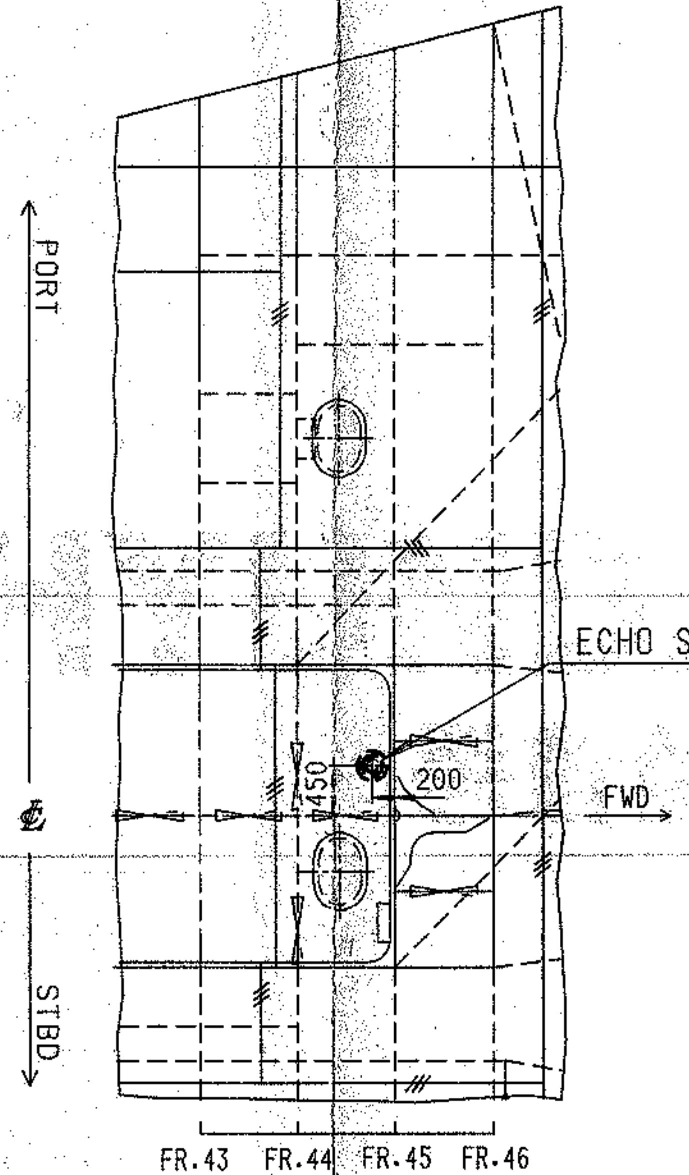
PORT
STBD
℄
FWD
ECHO SOUNDER TRANSDUCER
450
200
FR.43
FR.44
FR.45
FR.46

ARRG'T OF ECHO SOUNDER & SPEED LOG TRANSDUCER (FORE SHIP) (NON SCALE)

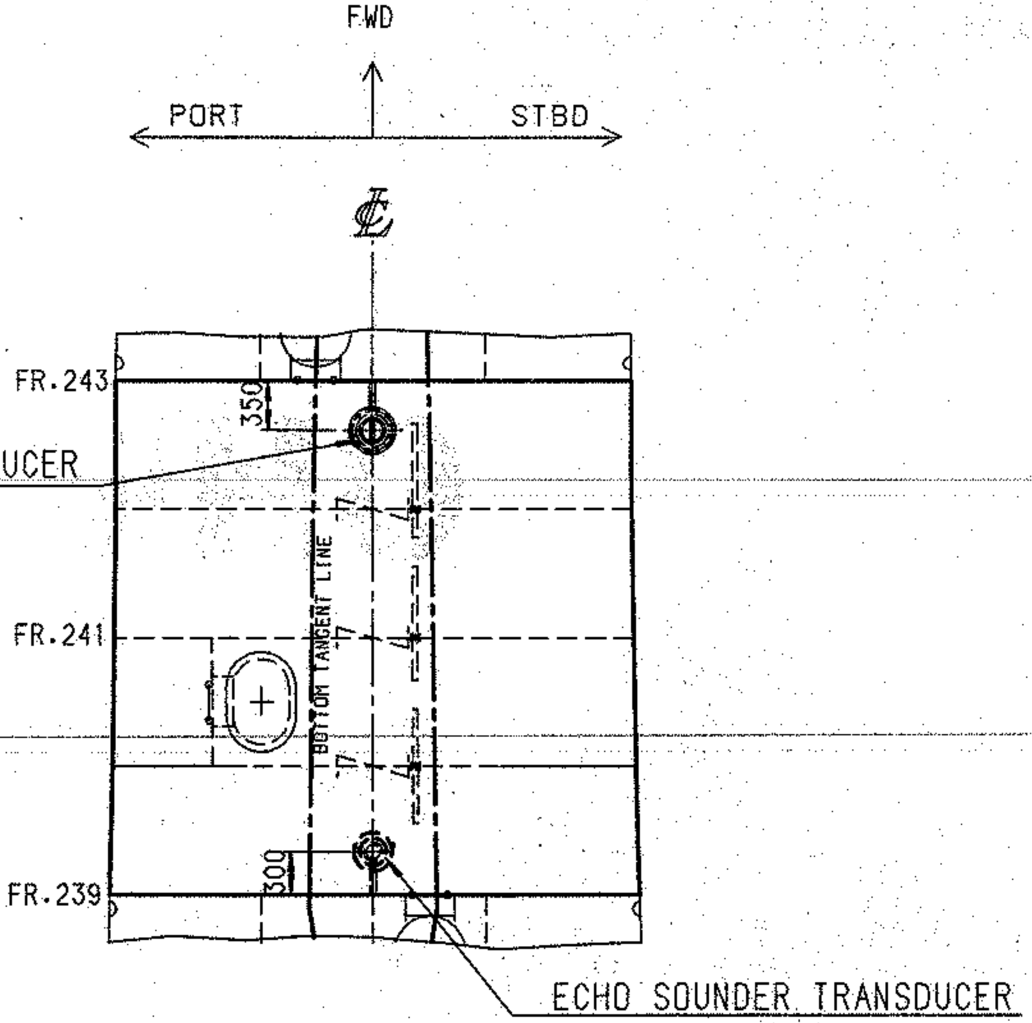
FWD
PORT
STBD
℄
FR.243
FR.241
FR.239
350
300
SPEED LOG TRANSDUCER
BOTTOM TANGENT LINE
ECHO SOUNDER TRANSDUCER

PRINCIPAL PARTICULARS

LENGTH O. A.	232.39 M
LENGTH B. P.	222.40 M
BREADTH MLD.	32.26 M
DEPTH MLD.	32.64 M
DRAUGHT (DESIGN) MLD.	9.00 M
DRAUGHT (SCANTLING) MLD.	10.00 M

FREEBOARD : "B" TYPE

FLAG : PANAMA

CLASS : DET NORSKE VERITAS, +1A1, CAR CARRIER RO/RO,
EO, MCDK, TMON

MAIN ENGINE : ONE(1), HYUNDAI B&W 8S60ME-C8

MCR : 19040 kW X 105.0 RPM

NCR : 17136 kW X 101.4 RPM

DESIGN OFFICE
2011.0[illegible]. [illegible]0
HYUNDAI SAMHO HEAVY IND.

AS FITTED DWG

SHIP NO.	IMO SHIP IDENTIFICATION NO.
S398	IMO 9441867
S399	IMO 9445394
S400	IMO 9445409
S443	IMO 9472206

CAUTION

THIS DRAWING CONTAINS CONFIDENTIAL PROPRIETARY INFORMATION. HENCE, THE REPRODUCTION, TRANSFER AND/OR UTILIZATION IN WHOLE OR IN PART ARE PROHIBITED WITHOUT THE WRITTEN PERMISSION OF HYUNDAI SAMHO HEAVY INDUSTRIES CO., LTD.

☐ FOR REFERENCE
☐ FOR WORKING
☐ FOR REVISION

000-0세구-2653 /20110316-종합설계부 -완성도용